Standard End caps

53004

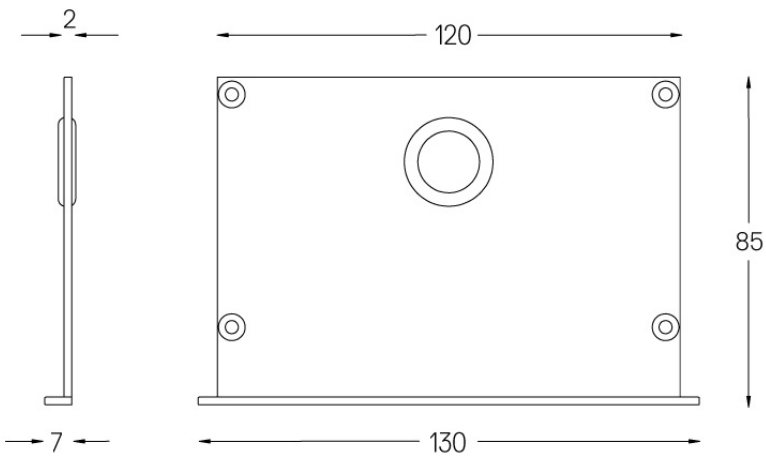

Design: O/M
Set of two End caps (2mm) for recessed application made of aluminium anodised.
Matt finish or electrostatic 100% polyester texture-finish paint

Finishes
- **.01** White / RAL 9010
- **.02** Black / RAL 9005
- **.10** Anodised aluminium

www.om-light.com / mail@om-light.com Rua Maurício Lourenço Oliveira 186, 4405-034 Vila Nova de Gaia, Porto. Portugal. / Apartado 1538 4401-901 Vila Nova de Gaia, Porto Portugal / tel. +351 223 710 419