Go

3,7W / 315lm / 3000K / Flood 42° / ø50mm

64736

Design: O/M
Ceiling-recessed luminaire made of aluminium die-cast.
Recessing system with spring clips.

LED CRI>90 / >50.000h, L80/B10
3-step MacAdam / Power supply not included
IP44 | 100mA

LED 3000K	Light Source	Luminaire
Power	**3,7W**	**3,7W**
Flux	**395lm**	**315lm**
Efficiency	**107lm/W**	**85lm/W**
LOR	**-**	**80%**
UGR	**-**	**<16**

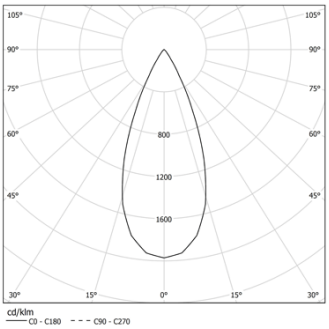

Beam angle
Flood 42°

Application

Weight
0.08Kg

This page was generated on 2026-01-15. Click here for the latest version.

www.om-light.com / mail@om-light.com Rua Maurício Lourenço Oliveira 186, 4405-034 Vila Nova de Gaia, Porto. Portugal. / Apartado 1538 4401-901 Vila Nova de Gaia, Porto Portugal / tel. +351 223 710 419

mm

Ø45

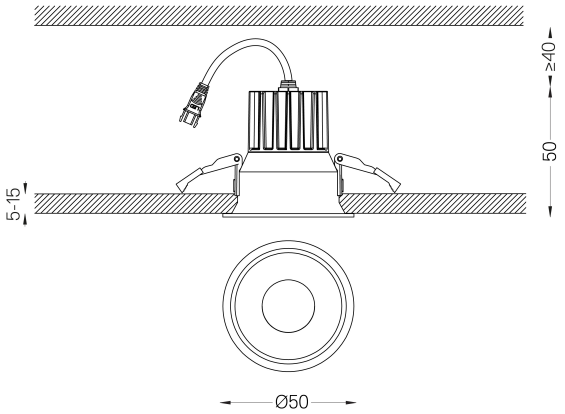

Finishes

- ○ **.04** Matt White
- ● **.05** Matt Black

Mandatory
59088 Driver On/Off [100mA]
138x30x21mm
59089 Driver DALI [100mA]
144x30x21mm
59090 Driver PhaseCut [100mA]
122x41x23mm
59091 Driver 1-10V [120mA]
130x30x20mm

Optional
59148 Louvre
ø25x4mm
59149 Elliptical diffuser
ø25x4mm

The cutout dimensions are for plasterboard ceilings. For other type of material please contact: support@om-light.com
The 5-year guarantee applies only when the luminaire and driver are supplied together.

Data according to regulations
2019/2020/EU supplemented by 2021/341 |2019/2015/EU supplemented by 2021/340/EU Energy Consumption Labelling Ordinance. This product contains a light source of efficiency class F
Model Identifier BXRH-30G1000-B-83

www.om-light.com / mail@om-light.com Rua Maurício Lourenço Oliveira 186, 4405-034 Vila Nova de Gaia, Porto. Portugal. / Apartado 1538 4401-901 Vila Nova de Gaia, Porto Portugal / tel. +351 223 710 419