Over Track

9,8W / 770lm / 3000K / On/Off / Medium 41º / ø85mm

60277

Design: O/M + Bartenbach GmbH
Track-mounted spotlight with die-cast aluminium body with electrostatic 100% polyester paint finish. Spot-lens with individual complex surface rips to provide a focal light and an extremely narrow beam. Orientable by 90º horizontal rotation and 330º vertical rotation.
Driver included.

LED CRI>90 / >50.000h, L80/B10
2-step MacAdam / Driver included.
IP20 | 230Vac | 50/60Hz

3000K	Light Source	Luminaire
Power	**9,8W**	**12,3W**
Flux	**1035lm**	**770lm**
Efficiency	**106lm/W**	**63lm/W**
LOR	**-**	**74%**
Operating Condition	**-**	**230Vac**

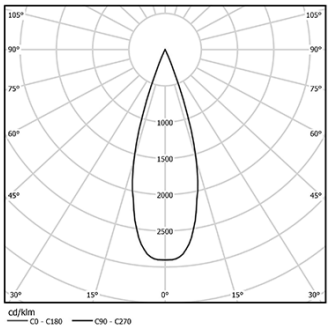

Beam angle
Medium 41º

Application

Weight
0,64Kg

mm

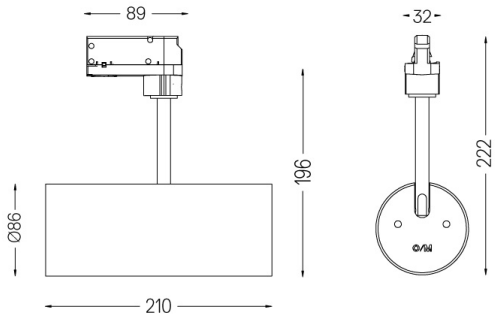

Finishes

- ○ **.01** White / RAL 9010
- ● **.02** Black / RAL 9005

Data according to regulations
2019/2020/EU supplemented by 2021/341 |2019/2015/EU supplemented by 2021/340/EU Energy Consumption Labelling Ordinance. This product contains a light source of efficiency class F
Model Identifier 2053560257H

This page was generated on 2026-01-15. Click here for the latest version.

www.om-light.com / mail@om-light.com Rua Maurício Lourenço Oliveira 186, 4405-034 Vila Nova de Gaia, Porto. Portugal. / Apartado 1538 4401-901 Vila Nova de Gaia, Porto Portugal / tel. +351 223 710 419